01 Descriptions

File: 01 Descriptions.kicad_sch

02 Block Diagram

File: 02 Block Diagram.kicad_sch

03 Power

File: 03 Power.kicad_sch

04 Debug & XIAO Header

File: 04 Debug & XIAO Header.kicad_sch

05 nRF54LM20A

File: 05 nRF54LM20A.kicad_sch

06 Peripherals

File: 06 Peripherals.kicad_sch

CC BY-SA 4.0

seeed studio

Sheet: /
File: XIAO nRF54LM20A.kicad_sch

Title: XIAO nRF54LM20A

Size: A3	Date: 2026-02-02	Rev: V0.9
KiCad E.D.A. 9.0.7		Id: 1/7

Version	Descriptions	Data	Name
V1.0	First Release	12/18/2025	

CC BY-SA 4.0

Sheet: /01 Descriptions/
File: 01 Descriptions.kicad_sch

Title: XIAO nRF54LM20A

Size: A3	Date: 2026-02-02	Rev: V0.9
KiCad E.D.A. 9.0.7		Id: 2/7

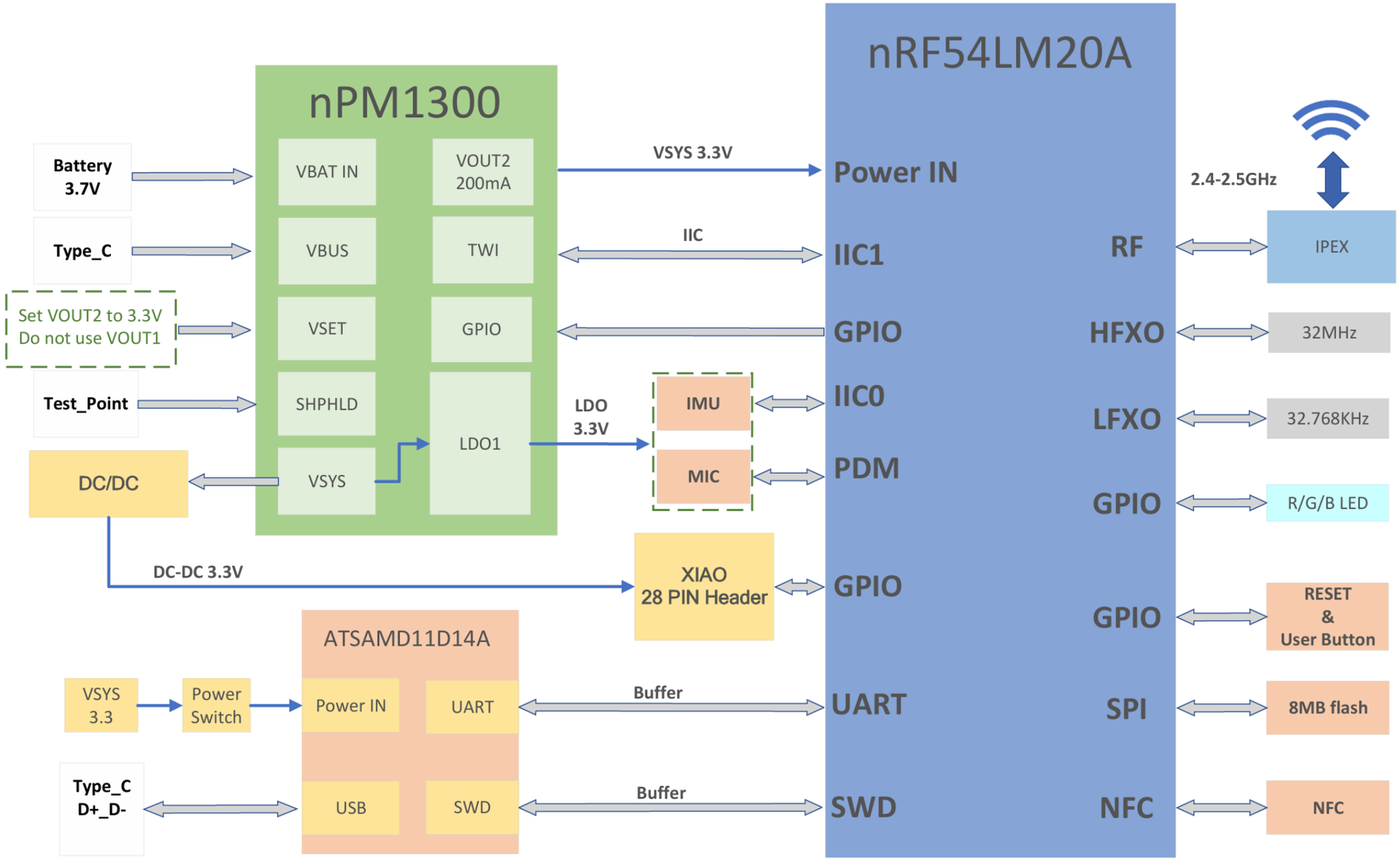

seeed studio

Sheet: /02 Block Diagram/
File: 02 Block Diagram.kicad_sch

Title: XIAO nRF54LM20A

Size: A3	Date: 2026-02-02	Rev: V0.9
KiCad E.D.A. 9.0.7		Id: 3/7

CC BY-SA 4.0

TYPE C input/output:

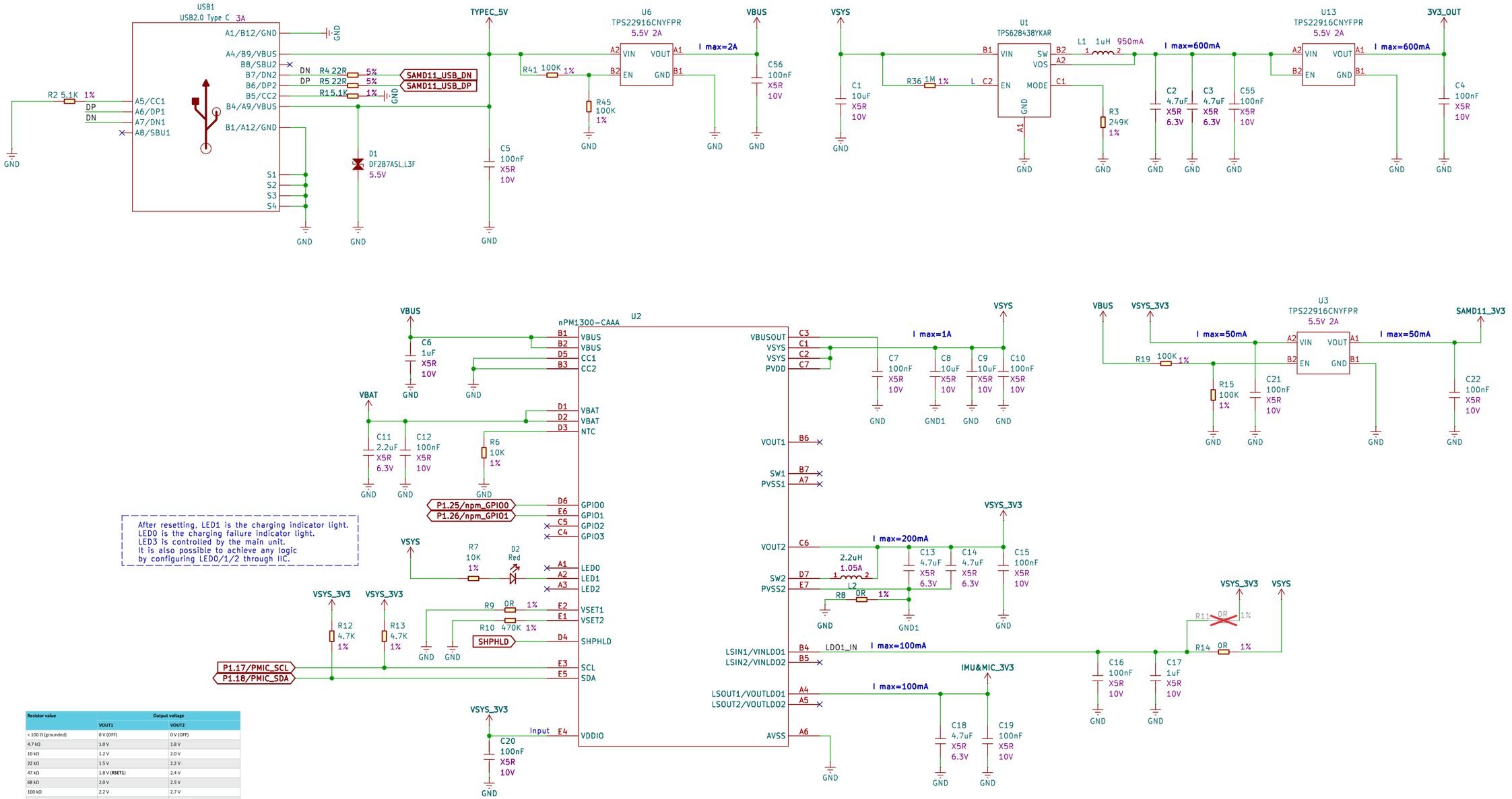

After resetting, LED1 is the charging indicator light.
LED0 is the charging failure indicator light.
LED3 is controlled by the main unit.
It is also possible to achieve any logic
by configuring LED0/1/2 through IIC.

Resistor value	Output voltage	
	VOUT1	VOUT2
< 100 Ω (grounded)	0 V (OFF)	0 V (OFF)
4.7 kΩ	1.0 V	1.8 V
10 kΩ	1.2 V	2.0 V
22 kΩ	1.5 V	2.2 V
47 kΩ	1.8 V (**RSET1**)	2.4 V
68 kΩ	2.0 V	2.5 V
100 kΩ	2.2 V	2.7 V
150 kΩ	2.5 V	3.0 V (**RSET2**)
250 kΩ to 500 kΩ	2.7 V	3.3 V

Pin	Pin name	Default indication mode
1	**LED0**	ERR (error)
2	**LED1**	CHG (charging)
3	**LED2**	HOST (host activity)
4	**GND**	N/A (ground)

Part	Parameter controlled (PMIC)	Function
SW1	**SHPHLD/RESET**	PMIC RESET / Exit Ship mode / Exit Hibernation mode
SW2	**GPIO0**	PMIC GPIO0
SW3	**GPIO1**	PMIC GPIO1
SW4	**GPIO2**	PMIC GPIO2

seeed studio

Sheet: /03 Power/
File: 03 Power.kicad_sch

Title: XIAO nRF54LM20A

Size: A3 | Date: 2026-02-02 | **Rev: V0.9**
KiCad E.D.A. 9.0.7 | Id: 4/7

CC BY-SA 4.0

SWD Debug IC (ATSAMD11D14A)

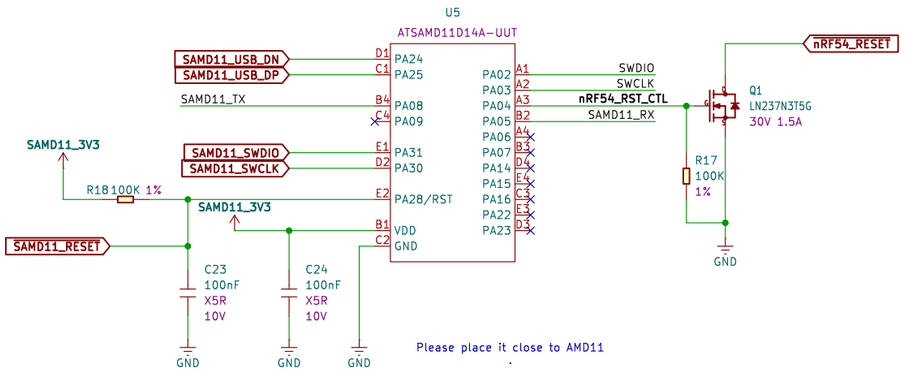

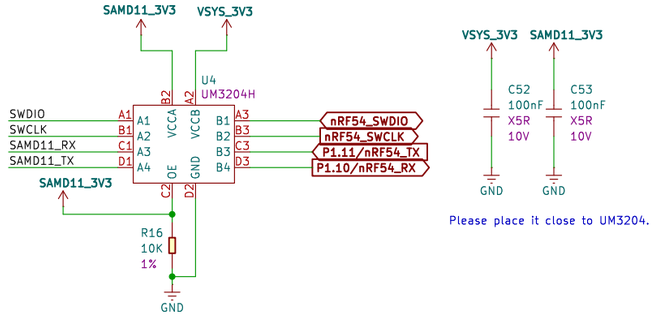

XIAO Header

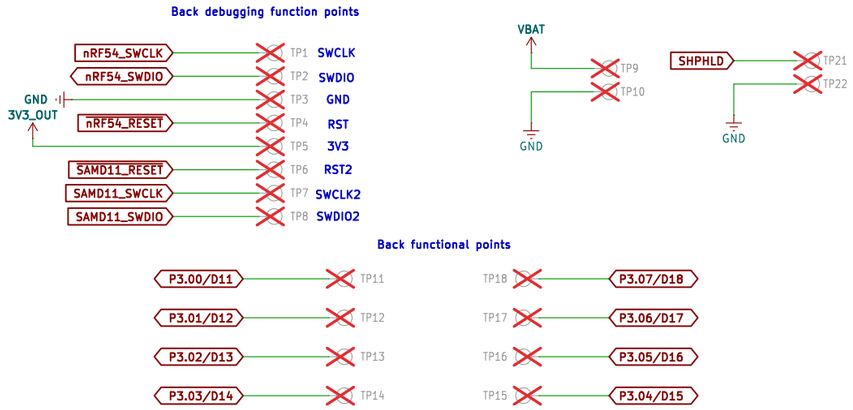

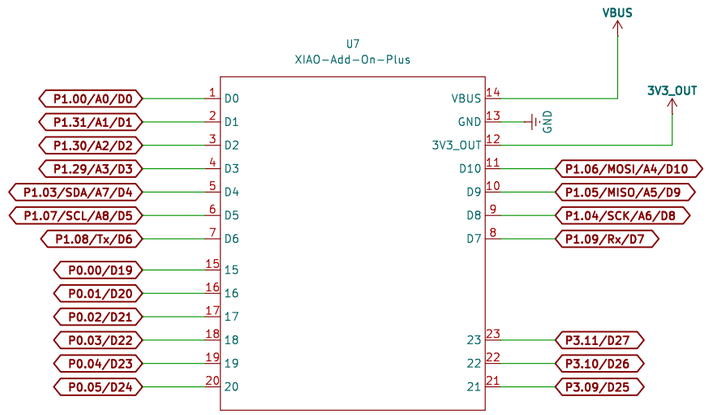

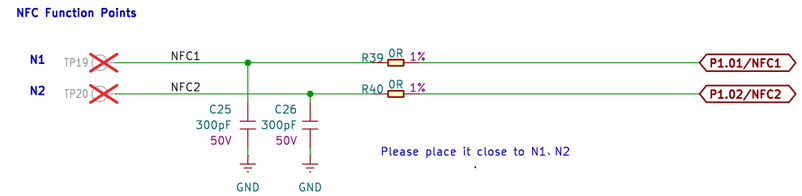

seeed studio

Sheet: /04 Debug & XIAO Header/
File: 04 Debug & XIAO Header.kicad_sch

Title: XIAO nRF54LM20A

Size: A3	Date: 2026-02-02	Rev: V0.9
KiCad E.D.A. 9.0.7		Id: 5/7

CC BY-SA 4.0

nRF54LM20A

All IOs are defaulted to high-impedance input state.

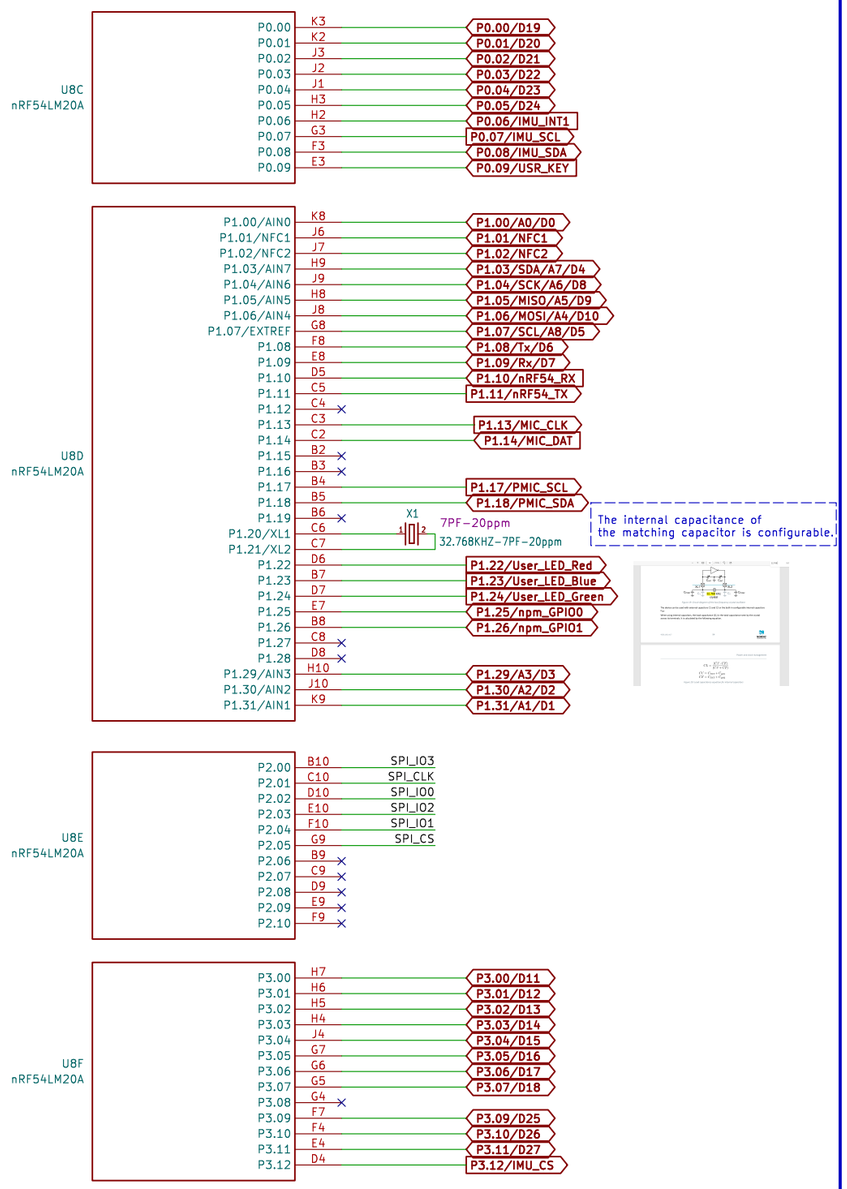

nRF54LM20A

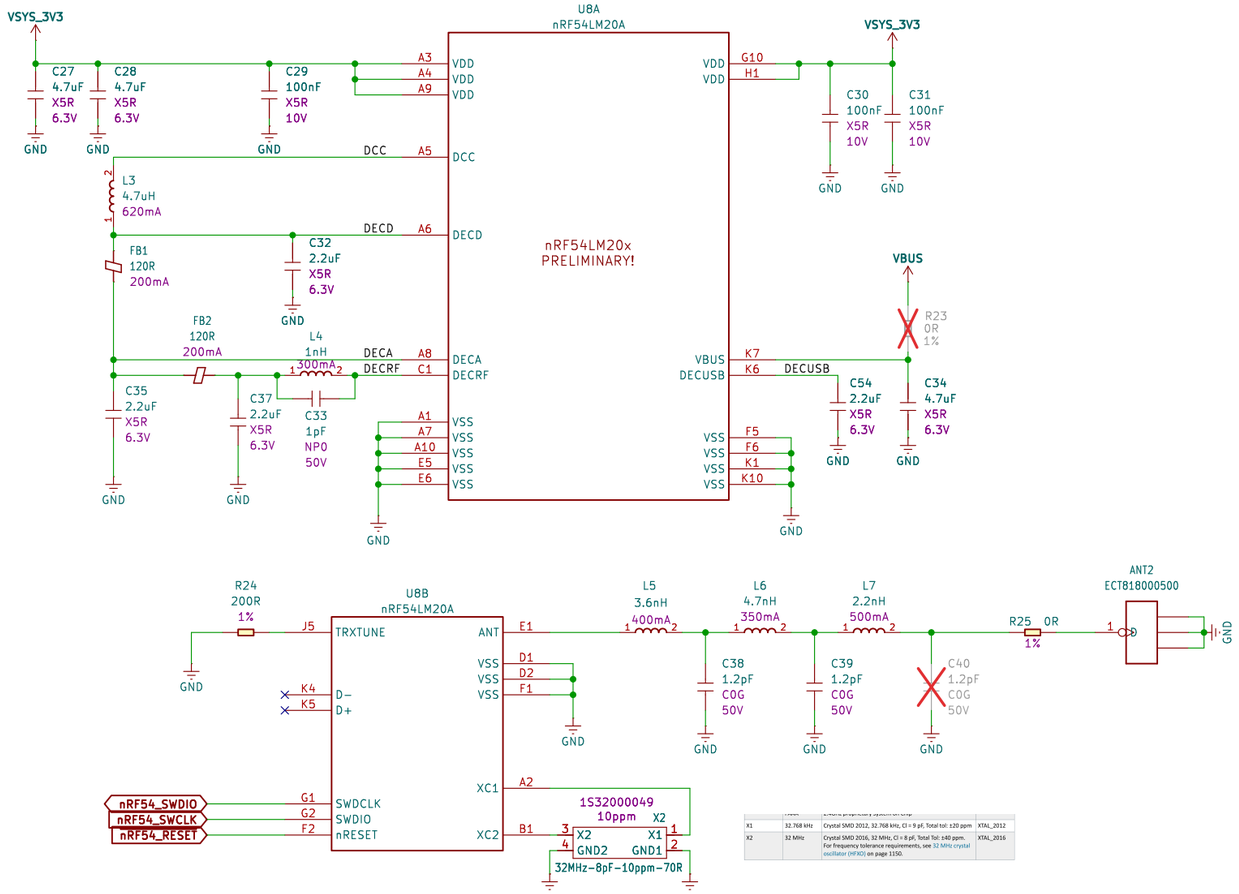

X1	32.768 kHz	Crystal SMD 2012, 32.768 kHz, CI = 9 pF, Total tol: ±20 ppm	XTAL_2012
X2	32 MHz	Crystal SMD 2016, 32 MHz, CI = 8 pF, Total Tol: ±40 ppm. For frequency tolerance requirements, see 32 MHz crystal oscillator (HFXO) on page 1150.	XTAL_2016

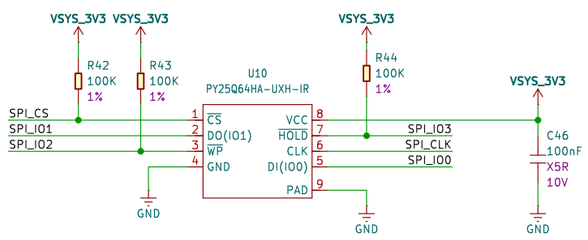

seeed studio

Sheet: /05 nRF54LM20A/
File: 05 nRF54LM20A.kicad_sch

Title: XIAO nRF54LM20A

Size: A3	Date: 2026-02-02	Rev: V0.9
KiCad E.D.A. 9.0.7		Id: 6/7

CC BY-SA 4.0

IMU

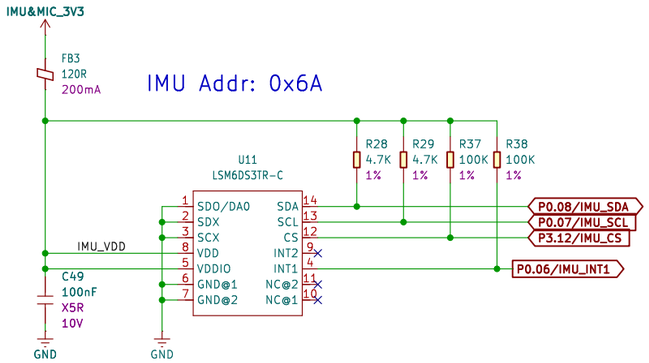

12	CS	I²C/SPI mode selection (1: SPI idle mode / I²C communication enabled; 0: SPI communication mode / I²C disabled)	I²C/SPI mode selection (1: SPI idle mode / I²C communication enabled; 0: SPI communication mode / I²C disabled)

KEY

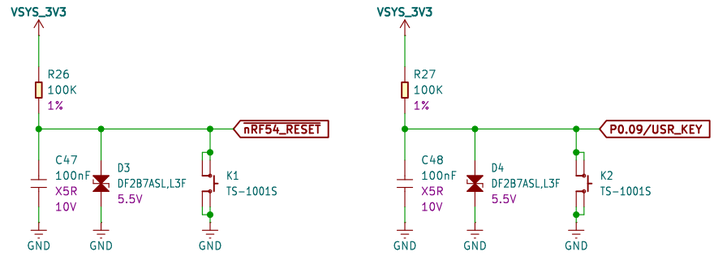

MIC

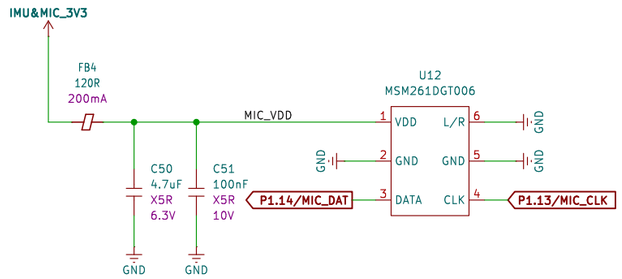

LED-R/G/B

seeed studio

Sheet: /06 Peripherals/
File: 06 Peripherals.kicad_sch

Title: XIAO nRF54LM20A

Size: A3	Date: 2026-02-02	Rev: V0.9
KiCad E.D.A. 9.0.7		Id: 7/7

CC BY-SA 4.0